AC0C6–09
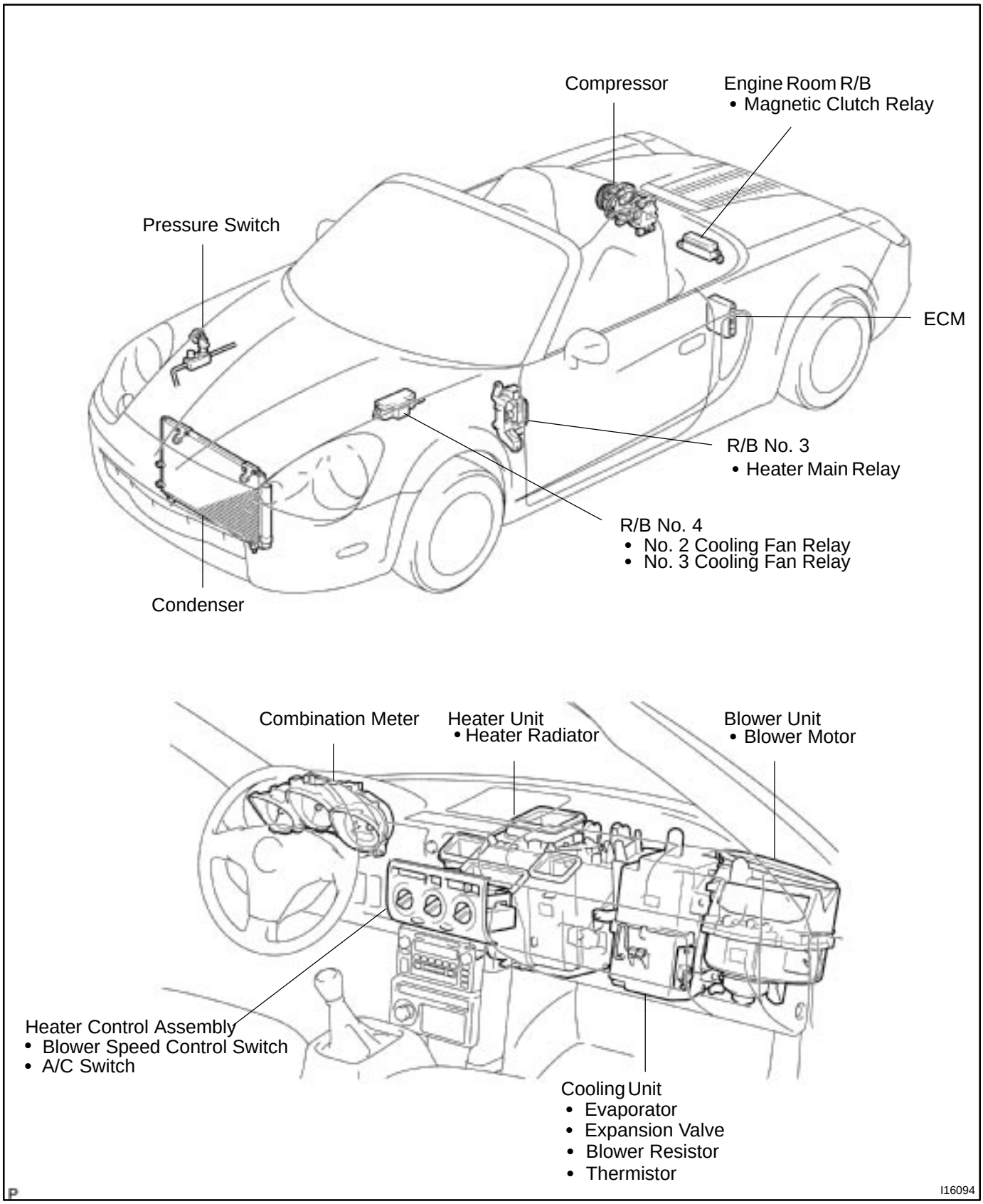
LOCATION